ANYAGVIZSGÁLÓK LAPJA Elektronikus folyóirat
MINŐSÉGBIZTOSÍTÁS * ÁLLAPOTELLENŐRZÉS 2006/3

Biomechanical properties and analysis of the mechanical parameters of human cerebral aneurysms

Brigitta K. Tóth – Imre Bojtár* – Gábor Raffai***

Keywords: arterial tissue, cerebral saccular aneurysm, material model, vascular biomechanical properties, viscoelasticity
Kulcsszavak: artériás szövet, agyi zsákszerű aneurysma, anyagmodell, ér biomechanikai tulajdonságai, viszkoelasztikus jellemző

Abstract

Cardiovascular disease is one of the most frequent reasons of mortality in the western word. Nowadays the mechanical properties of biological soft tissues were treated from a continuum mechanical perspective. The aim of this article is to investigate the mechanical response of arterial tissue. The arterial wall is composed mainly of an isotropic matrix material (elastin) and two families of collagen fibers which are arranged in symmetrical spirals. These fibers induce the anisotropy in the material response. So the constitutive law of an artery is orthotropic. We make a comparative study of some material model used in the literature to describe the mechanical response of arteries. These are the following models: 1. linearly elastic model, 2. Neo-Hookean model for incompressible materials, 3. Mooney-Rivlin model for incompressible materials. For this reason we make uniaxial and biaxial measurements to have appropriate parameters for the underlying material models.

Biaxial biomechanical characterization of living tissues and biocompatible materials provides important information about their in vivo behavior. To better qualify the anisotropy of miniature soft tissues (5x5mm total size with 2x2mm test region) we developed a planar biaxial (X-Y) test equipment driven by four step motors. Computer aided simulation experiments did not reveal significant differences either in stress development or in distribution when tissue samples inserted and fixed in truncated cone holders either sideways or cornerwise were stretched. The accuracy of the setup was tested using biocompatible isotropic silicone rubber samples and ramp (10μm/sec), as well as step-like (100μm in every 30sec) stretch protocols. Both protocols resulted in a linear 1:1 X-Y force relationship. The latter protocol can be used to estimate also Poisson's ratios and incremental viscoelastic properties of the material tested. This method and the protocols proved to be eligible to determine quantitatively the biomechanical behavior of anisotropic soft tissues.

We investigate the biomechanical properties of strips from human cerebral aneurysms from surgery and cadavers. (An aneurysm is a bulge along a blood vessel.) Meridional and circumferential, thick and thin parts were distinguished respectively.

Összefoglalás

Humán agyi aneurysmák biomechanikai tulajdonságainak és szilárdságtani paramétereinek meghatározása. Munkánk célja az embereknél diagnosztizált agyi aneurysmák (az érfal kóros tágulatai) biofizikai tulajdonságainak analízise.

Laboratóriumi méréseket végeztünk, hogy az aneurysmafal mechanikai paramétereit vizsgálhassuk. Jelenleg a terápiás döntés a még nem ruptúrált aneurysmák esetében csupán a méreten és a kóros elváltozás elhelyezkedésén múlik, abban a hitben, hogy csupán ezektől a tényezőktől függ az érfal későbbi repedése. Sajnos azonban minden páciensnél a paraméterek számos variációja fordulhat elő, ezért nehéz általános következtetéseket levonni, továbbá különösen nehéz in vivo mérésekkel tesztelni az elméleteket és a szimulációkat. A kutatási program végső célja, hogy minél kedvezőbb módszert találjunk az aneurysmák diagnózisához, valamint a különböző jellegű és mértékű orvosi beavatkozás szükségességének megállapításához.

Az aneurysmafal anyagi paramétereinek meghatározása munkánk első lépése. Ehhez összehasonlítottuk az irodalomból ismert mechanikai modelleket, nevezetesen: 1. a lineárisan rugalmas modellt; 2. a Neo-Hookean-modellt; 3. Mooney–Rivlin-modellt. Az agyi aneurysmák sztérikusan inhomogén viselkedésének megismeréséhez az aneurysma szövetének mechanikai tulajdonságait mértük az alakváltozás függvényében, különböző helyeken (vékony és vastag régiókban) és különböző irányokban (hosszanti és körkörös). Az aneurysma csíkok jellegzetes hiperelasztikus-plasztikus viselkedést mutatnak a feszültségrelaxációs teszteknél. A meridionális vékony csíkok húzószilárdsága nagyobb, mint a meridionális vastagoké. A laboratóriumi teszteket alapul véve végeselem-módszerrel feszültség–alakváltozás görbéket számoltunk.

Az érfal anyagi viselkedésének mélyebb megértéséhez az egytengelyű húzóvizsgálatok mellett biaxiális méréseket is végeztünk, ezek segítették a nemlineáris viselkedés egyes szakaszain bekövetkező jelenségek pontosabb értelmezését.

*Budapest University of Technology and Economics (BME), Department of Structural Mechanics
**Semmelweis University (SE), Institute of Human Physiology

This paper focuses on the analysis of the haemodynamic pattern and biophysical properties of cerebral aneurysms, diagnosed and delineated in living human individuals. The aim of this research is to estimate stresses at critical points of the aneurysm wall and its parent artery, and to estimate the likelihood of a later aneurysm rupture. Despite the 5% occurrence of intracranial aneurysms in the population and the severity of their rupture (50% mortality rate) the pathomechanism of aneurysm formation and rupture remains still to be elucidated. Consequently, we carried out a comparative study on biomechanical properties of in vivo ruptured and unruptured aneurysms.

Introduction

Brain arterial aneurysms are common forms of arterial deformation occurring in about 5% of the adult population. The aneurysm is a bulge along the artery hanging there embedded in the surrounding tissue. In most situations it usually appears around a joining of two arteries. This bifurcation is the part of the supplier of the brain vascular bed system so if its blow-out (rupture) cause incalculable chain reaction, there is no safe solution without any side-effect to assure the patient against unpleasant consequences, see for instance [2],[6],[9]. In the majority of the cases the patient does not notice anything from the presence of the aneurysm, in some cases, however, the aneurysm bursts leading to stroke and immediate death.

At present, the therapeutic decision for non-ruptured aneurysms is made purely on the basis of the size and location of the lesion in a belief that those are the only factors influencing the likelihood of rupture.

The literature results providing basis for this practice have been seriously criticized by many and clinical decision is frequently made on the personal experience and judgment of the doctor. Our work will provide the physicians - and the patients - with a much more accurate prognosis of the disease that will allow for a more appropriate decision regarding treatment. We note that besides of its scientific merit, the potential of providing information about the prognosis of the disease and about the optimal technique for its treatment would greatly enhance the value of the modern angiography systems.

Nevertheless the importance of this area cannot be overestimated – the most important causes of death in developed countries are arterial deceases. Research budgets and public interest for this subject grows continuously.

Methods

1. Research strategy

The geometrical and morphological data as well as physiological parameters of the patients collected at the National Institute of Neurosurgery are combined with physiological information of the vessel wall and aneurysm wall provided by the Dep. of Human Physiology (Semmelweis Medical University, Budapest). The determination of the material parameters of the aneurysm wall is the first step of our work.

Strength calculations are done on these models in order to predict their mechanical strength (allowable blood pressure, etc.), and to compare the effects of different possible medical treatments. This is the second step of the research activity.

The final goal of this research program is to work out non-intrusive diagnostic tools detecting the presence of aneurysms and to assess the necessity of medical intervention.

Specific aim of this study was to characterize quantitatively the behavior of strips from human cerebral aneurysm.

2. Material parameters

One of the problems is that the different constitutive models in the literature are based on data from different types of arteries [5],[1],[3]. Moreover, cardiovascular disease like human cerebral aneurysm can only be studied in detail if a reliable constitutive model of the arterial wall is available. In order to get acquainted with the sterically inhomogeneous behavior of cerebral aneurysms first we measured in uniaxial tests the in vivo mechanical properties of the aneurysm tissue as a function of strain in different regions (thin and thick) and in different directions (meridional and circumferential). Saccular aneurysm specimens from 51 patients were obtained and 3 mm width strips (n=110) were cut. The strips were incubated in Krebs-Ringer solution at 37 ºC and were stretched in a uniaxial biomechanical apparatus by 200 µm in every 2 min until till their tear. Force was computer recorded, wall stress (σ) and strain (ε) were calculated. Biomechanical properties were cross checked with clinical data and histological results. The strips from aneurysms showed typical hyperelastic-plastic behavior at the stress-relaxation tests. Meridional thin strips exhibited larger tensile strengths than the meridional thick ones, see [7].

An artery can practically be treated as a thick-walled circular cylinder which is appropriate for the analysis of bending, extension, inflation and torsion of the tube. In the literature some models are able to provide a full three-dimensional description of the state of stress in the artery, but the large number of material constants may lead to parameter identifica-

tion problems. Several models use geometrical simplifications too.

After this we present the uniaxial and biaxial clinical studies and on basis of this we quantify material properties such us the Young's modulus.

3. Typical mechanical behavior of arterial walls

By *in vivo* tests the artery is observed under real life conditions, while *in vitro* tests mimic real loading conditions in a physiological environment. The complex anisotropic material response can only be measured in an in vitro experiment, though the exact physiological circumstances can be rather difficult to simulate. Arteries do not change their volume in the physiological range of the deformation, for this reason they can be regarded as incompressible – rubber like - materials. Therefore we have set ourselves the task to determine the mechanical properties from biaxial tests: uniaxial extension tests are certainly insufficient to completely quantify the mechanical behavior of arterial walls. The mechanical behavior of arteries depends on physiological and chemical environmental factors, therefore they were tested in appropriate oxygenated, temperature controlled salt solutions. Whereas the composition of arterial walls varies along the arterial tree so the shape of the stress-strain curve for blood vessels depends on the anatomical site, the general mechanical characteristics are the same. The artery is a heterogeneous system and it can be regarded as a fiber-reinforced composite biomaterial. The layers of the arterial walls are composed mainly of an isotropic matrix material (associated with the elastin) and two families of fibers (associated with the collagen) which are arranged in symmetrical spirals.

4. Continuum-mechanical framework

Fundamental equations are essential to characterize kinematics, stresses and balance principles, and hold for any continuum body [4]. Generally we use a functional relationship as a constitutive equation, which determines the state of stress at any point **x** of a continuum body. Our main goal is to study various constitutive equations within the field of solid mechanics appropriate for approximation techniques. We follow the so-called phenomenological approach which describes the macroscopic behavior of living tissues as continua. Numerous materials can sustain finite strains without noticeable volume changes. Such materials can be regarded as incompressible, according to a common idealization in continuum mechanics. Materials which keep the volume constant throughout a motion are characterized by the incompressibility constraint $J = 1$, where J means the determinant of the gradient tensor. In general, these materials are referred to as constrained materials. The stress response of hyperelastic materials is derived form the given strain-energy function Ψ:

$$\sigma_{ij} = \frac{\partial \Psi(\boldsymbol{\varepsilon})}{\partial \varepsilon_{ij}}.$$

In the next section we summarize the most important energy functions frequently used in biomechanics.

4.1. Ogden model for incompressible rubber-like materials

The postulated strain-energy function Ψ describes the changes of principal stretches $\lambda_a, a = 1,2,3$ from the reference configuration to the current configuration:

$$\Psi = \Psi(\lambda_1,\lambda_2,\lambda_3) = \sum_{p=1}^{N} \frac{\mu_p}{\alpha_p}\left(\lambda_1^{\alpha_p} + \lambda_2^{\alpha_p} + \lambda_3^{\alpha_p} - 3\right),$$

where N is a positive integer which determines the number of terms in the strain-energy function, μ_p are constant shear module and α_p are dimensionless constants, p = 1,…,N. Only three pairs of constants are required to give an excellent correlation with experimental stress-deformation data.

We find after differentiation that the three principal values σ_a of the Cauchy stresses have the form:

$$\sigma_a = -p + \sum_{p=1}^{N} \mu_p \lambda_a^{\alpha_p}, \quad a = 1,2,3,$$

where p is a scalar not specified by a constitutive equation. It is determined from a boundary condition of the examined problem.

4.2. Mooney-Rivlin model for incompressible rubber-like materials

The Mooney-Rivlin model uses the setting $N = 2, \alpha_1 = 2, \alpha_2 = -2$. Using the strain invariants I_1, I_2 with the constraint condition $I_3 = \lambda_1^2\lambda_2^2\lambda_3^2 = 1$ we obtain that:

$$\psi = c_{10}\left(\lambda_1^2 + \lambda_2^2 + \lambda_3^2 - 3\right) + c_{01}\left(\lambda_1^{-2} + \lambda_2^{-2} + \lambda_3^{-2} - 3\right)$$
$$= c_{10}(I_1 - 3) + c_{01}(I_2 - 3)$$

with the constant $c_{10} = \mu_1/2$ and $c_{01} = -\mu_2/2$.

Derivates of the strain-energy function of the Mooney-Rivlin model with respect to the invariants I_1 and I_2 give the simple associated stress relations:

$$\sigma = -p\,\mathrm{I} + 2c_{10}\,\mathrm{b} - 2c_{01}\,\mathrm{b}^{-1},$$

where the strain tensor $\mathbf{b}^{-1}$ is the inverse of the left Cauchy-Green tensor **b**, which is defined by the help of the **F** gradient tensor: $\mathbf{b} = \mathbf{F}\mathbf{F}^{\mathrm{T}}$ (**F** is on the left). It

is an important strain measure in terms of spatial co-ordinates. **I** denotes the second-order unit tensor.

4.3. Neo-Hookean model for incompressible rubber-like materials

The neo-Hookean model applies the setting $N = 1, \alpha_1 = 2$. Using the first principal strain invariant I_1, we find that:

$$\psi = c_{10}\left(\lambda_1^2 + \lambda_2^2 + \lambda_3^2 - 3\right) = c_{10}\left(I_1 - 3\right)$$

with the constant $c_{10} = \mu_1 / 2$. The strain-energy function involves a single parameter only and relies on phenomenological considerations.

Derivates of the strain-energy function of neo-Hookean model with respect to the invariants I_1 give the simple associated stress relations:

$$\sigma = -p\,\mathrm{I} + 2c_{10}\,\mathrm{b}\,,$$

where the strain tensor **b** is the left Cauchy-Green tensor, and **I** is the unit tensor.

5. Our laboratory tests and results

In our program – based on our laboratory tests – we applied the most common strain-energy functions. In *Figure 1* our uniaxial and biaxial (see *Fig. 2* too) test machines can be seen, both of them are connected to the computer.

Figure 1: *The uniaxial and biaxial laboratory test machines. The strain gauges were pasted on material of spring steel, the jaws were made of eloxed aluminium and the gripped points were fixed on thread slides.*
1. ábra. *Egy- illetve kéttengelyű nyúlást mérő műszerek. A nyúlásmérők rugóacélra lettek rögzítve, a befogó pofák eloxált alumíniumból készültek, a befogási pontok a csavarmenet csúszkáján rögzítettek*

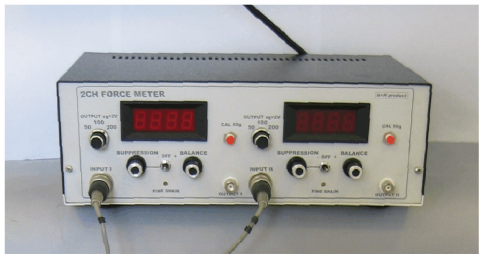

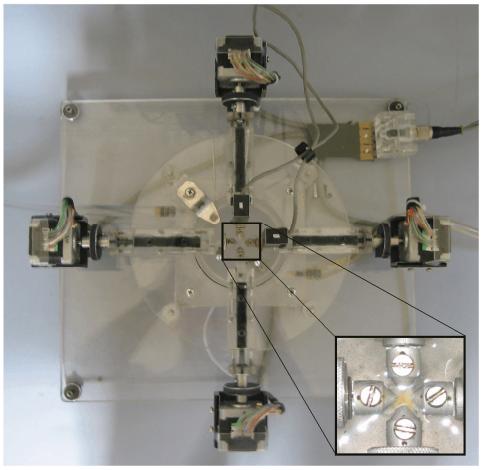

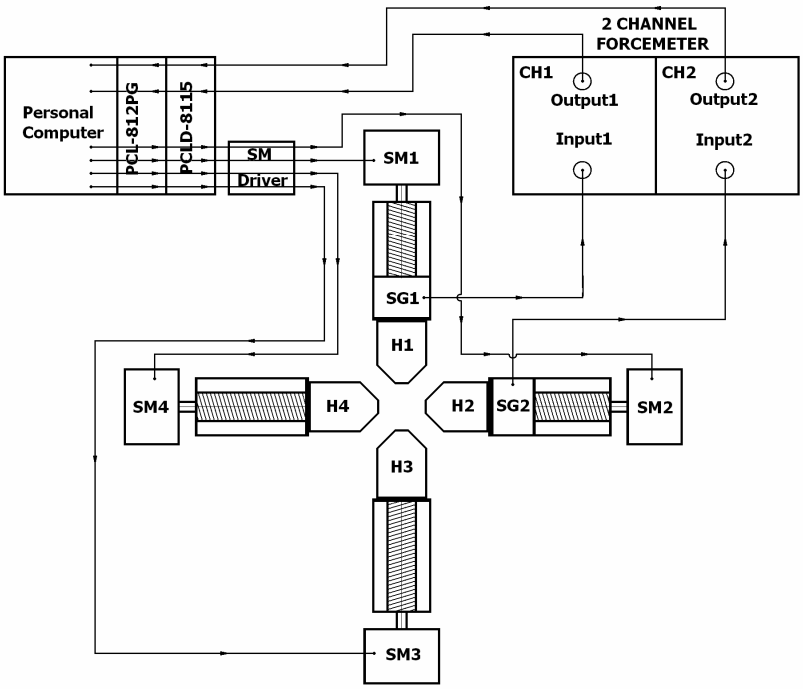

Figure 2. ábra.

Figure 2: *Biaxial laboratory test machines*

Left: Major components of the biaxial setup. Right: Block diagram of the biaxial setup.

Sample holders (H) are mounted, applying two strain-gauge force transducers (SG), to two pairs of supports positioned in perpendicular direction to each other. Outputs of strain gauges are fed into the 2 channel force meter, and the force signals via a multi-lab card to the PC. The displacement of the screw controlled supports is driven by four step motors (SM) connected to a PC by multi-lab card and SM driver unit.

2. ábra. *Biaxiális laboratóriumi mérőműszer*

Balra: A biaxiális berendezés főbb részei. Jobbra: A biaxiális készülék blokk diagrammja.

A minta-tartók (H) a rájuk erősített két nyúlásmérő erő-átalakítóval (SG) láthatók. A két pár tartó egymásra merőleges irányú. Az erőmérők kimenete 2 csatornás erőmérő készülékhez jut, a jelek egy multi-lab kártyán keresztül továbbítódnak a PC-hez. A csavarok elmozdulásait 4 motor idézi elő (SM), a mozgásokat a multi-lab kártya és az SM vezérlő egység a PC-hez kapcsolja.

Incremental stretch resulted in stress relaxation of the tissue specimens. Regression analysis created a linear relationship between the initial aneurism thickness (h) and maximal strain (ε_{max}=0.41+0.32h, r^2=0.32). Beside similar ε_{max} and h, tensile strength of strips from non-ruptured aneurysms was significantly higher (495 ± 54 kPa) than from the ruptured ones (330 ± 44 kPa). In patients harboring non-ruptured and ruptured aneurysm, the rate of hypertension was 69.2% and 80,8%, respectively. Tensile strength of the samples and rate of rupture proved to be significantly higher in patients with hypertensive background (459 ± 44 kPa, 53,8%) than in the normotensive ones (273 ± 43 kPa, 38,5%). Meanwhile, tensile strength was not influenced by the gender, aneurysm location, smoking habits and presence of inflammatory infiltration within the wall.

We conclude that a uniform weakening of the aneurism wall leads to their eventual rupture. Nevertheless, hypertension seemingly reinforces the aneurysm wall increasing the probability of rupture. Wall thickness determines maximal strain by 32%.

Based on these experiments we calculated the material parameters of the Mooney-Rivlin and Neo-Hooke nonlinear hyperelastic models, see *Table 1.* With the help of simple finite element tests all material parameters were checked.

	ε		σ (MPa)		E (MPa)	
	Feminin	Masculin	Feminin	Masculin	Feminin	Masculin
circumferential-thick	0,0180	0,0110	0,70	0,14	0,39	0,12
circumferential-thin	0,0090	0,0060	0,93	0,55	1,34	1,08
meridional-thick	0,0040	0,0070	0,40	0,34	0,65	0,49
meridional-thin	0,0060	0,0055	1,00	0,84	1,67	1,52

	Mooney-Rivlin				Neo-Hooke	
	C10		C01		C10	
	Feminin	Masculin	Feminin	Masculin	Feminin	Masculin
circumferential-thick	0,052	0,016	0,013	0,004	0,065	0,020
circumferential-thin	0,179	0,144	0,045	0,036	0,224	0,180
meridional-thick	0,087	0,065	0,022	0,016	0,109	0,081
meridional-thin	0,223	0,203	0,056	0,050	0,028	0,253

Table 1: *Linearly elastic, Mooney-Rivlin and Neo-Hooke material parameters calculated from experiments*
1. táblázat. *A kísérletek alapján számított lineárisan rugalmas, Mooney-Rivlin és Neo-Hooke anyagjellemzők*

Uniaxial techniques used frequently to characterize the biomechanics of living tissues and biocompatible materials provide rather restricted quality and amount of information about the two dimensional behavior of the tissue samples. Limitations of isometric strip and ring preparations are well recognized, because the isometric force and the length changes provide only one dimensional characteristics of the vessels. As an example, biomechanical characterization of circumferential and meridional strips of saccular cerebral aneurism individually does not reflect the mechanical interaction between these perpendicular segments [17].

In order to study the anisotropic stress-strain characteristics of miniaturized (down to a minimum of 5x5 mm total size with 2x2 mm test region) samples of living soft tissues, as well as living tissue equivalent and biocompatible materials, we developed and tested a novel planar biaxial (X-Y) system. For accurate force and displacement measurements the setup is equipped with two strain-gauge transducers, four computer controlled step motors, and a temperature controlled tissue bath.

Before we embarked on biaxial measurements, we made a comparative study to decide which type of the grip is the more favorable, which type has a smaller domain with disturbations. The two possible arrangements are the following (see *Figure 3*) Due to symmetry it is sufficient to analyze quarter of the vessels shown in *Figure 3* (see the sections marked with lines).

These results show that we can not make a significant distinction between the two types. The difference between the colours (see *Figure 4*) in the middle of the artery segment have no physical sense. The stress values that we can read in contour plots are in the same magnitude. Only in the maximum and minimum values differ from each other.

As seen on *Figure 4*, our biaxial measuring system is based on two force meters positioned perpendicularly to each other. Cantilever strain gauge transducers are used for force measurements. The strain gauges are stuck on rigid 1.5x7 mm stainless steel rods (4 on each), and are boxed in aluminum house mounted on two precision screw (M8) controlled supports. Outputs of the strain gauges connected in Wheatstone bridge are fed into a 2 channel force meter supplied with a digital display (3.5 digit). The force meter allows the selection of different calibrated measuring ranges (50, 100 and 200 g), and provides 2V DC analog voltage outputs at maximal deflection. Consequently, sensitivity of the force measuring unit could be set optionally as 40, 20 and 10 mV/g.

Analog outputs of the force meter are fed via a wiring-plate terminal board into an enhanced multilab card for A/D conversion (*Figure 2*). The digitalized

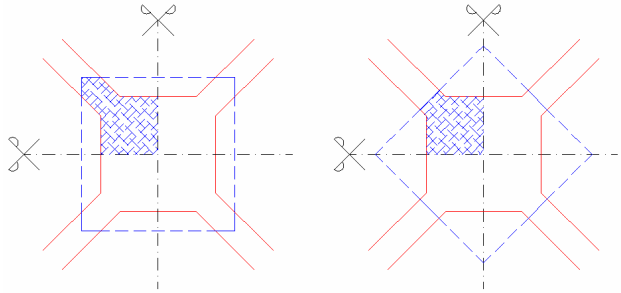

Figure 3: *Two possible arrangement of arterial strips*
3. ábra. *Az artériacsíkok befogásának két lehetséges elrendezése*

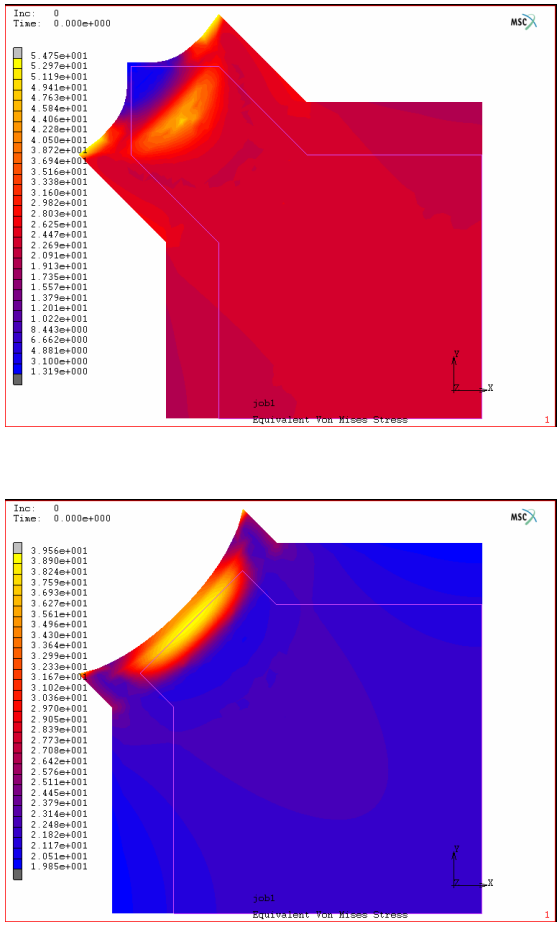

Figure 4: *Displacement and von-Mises stresses by extension 15% in the mentioned two gripping types, respectively*
4. ábra. *Az elmozdulások és a von-Mieses feszültségek 15%-os nyújtás hatására a fent említett két befogási mód esetében*

signals can be displayed on line and recorded for off line evaluation by a PC based data acquisition and process control software (Labtech Co MA, USA). As seen on *Figure 4*, at the edge of each support a stepping motor is mounted for controlling precisely the biaxial stretch. Using the Labtech software and the multi-lab card described above step motors were controlled individually via a driver unit. With the finest 0.9° step, as small as 2μm stepping distance, and applying the 20kHz maximum control frequency a 40mm/sec ramp rate can be accomplished along the two directions (axes) simultaneously.

The four sample holders were designed as truncated cones in order to minimize sample size (*Figure 2*). To increase retentiveness and to prevent tissue damage their inner surface was carefully roughened. This design allows measuring as small as 2x2 mm miniature tissue region located between the holders of a 5x5 mm sized sample.

Computer aided large strain simulations were carried out under plane stress-strain conditions in order to reveal stress development and distribution within a linear elastic sample. As illustrated on Figure 3 and 4, square shaped samples were cut and placed into the holders sideways or cornerwise with a symmetrical geometry. Simulated large strain did not reveal any significant inhomogeneity or qualitative differences of von-Mieses stresses (weighted average of normal and shear stress) within or between the regions of interest when any of these two gripping methods were applied. The force meters were tested using samples of biocompatible isotropic silicone rubber sheets cut to 7x7 mm size.

With the help of angiography we can build a model of an existent aneurysm, and this model can used for Finite Element Analysis calculation, too. This is the outer part of our research. The angiography allows us to build a real three dimensional model with the original geometry. Using the data of aneurysm material parameters the system could help the doctors to analyze the case, whether it needs an urgent operation or not. This way of geometrical modeling is much more complicated than the previous one. Many different tests are needed to declare that the system works reliably.

Summary

All the models discussed above are based on phenomenological approach in which the macroscopic nature of blood vessels is modeled. From this study it may be concluded that there is a need for a constitutive model which describes the viscoelastic behavior of the human arterial wall. We have proposed an approach in which the arterial wall is approximated as a three-layer thick-walled tube, with each layer modeled as a fiber-reinforced composite in the domain of large deformations and we have examined an human arterial aneurysm.

In cooperation with the co-workers of the National Institute of Neurosurgery and Human Sciences we made the first steps in the complex numerical simulations of brain aneurysms.

This work was done with the help of an OTKA grant (principal investigator dr. István Szikora, Nat. Inst. of Neurosurgery).

References

1. *C. J. Choung, Y. C. Fung*: Three-dimensional stress distribution in arteries. J. Biomech. Engr., 105:268-274, 1983
2. *D. A. Steinman: Image-based computational simulation of flow dynamics in a giant intracranial aneurysm*, American J. of Neuroradiology, 2003; 24: 559-566
3. *D. A. Vorp, K. R. Rajagopal, P. J. Smolinsky and H. S. Borovetz:* Identification of elastic properties of homogeneous orthotropic vascular segments in distension. *J. Biomech*., 28:501-512, 1995
4. *G. A. Holzapfel:* Nonlinear Continuum Mechanics. Hyperelastic Materials, 2002
5. *F. O'Rourke M.: Vascular mechanics in the clinic;* J. of Biomechanics, 2003; 36: 623-630
6. *M. J. Thubrikar: Wall stress studies of abdominal aortic aneurysm in a clinical model*, Annals of vascular surgery, 2001; 15: 355-366
7. *M. Orosz, G. Molnárka, G. L. Nádasy, G. Raffai, G. Kozmann E. Monos:* Validity of viscoelastic modells of vessel wall, 64th An. Meeting of the Hung. Physiol. Soc., Budapest, 1997
8. *M. Tóth, Gy. L. Nádasy, I. Nyáry, T. Kerényi, M. Orosz, Gy. Molnárka, E. Monos*: Sterically inhomogeneous viscoelastic behavior of human saccular cerebral aneurysms. *Érbetegségek*, IV/ 2, 1997 *J. Vasc. Res*., 35:345-355, 1998
9. *P. Van Loon:* Length force and volume-pressure relationship, 1977